APPROVED BY: _____ DATE: _____ PAINT CODE: _____

REVISIONS			
REV.	DESCRIPTION	DATE	APRVD

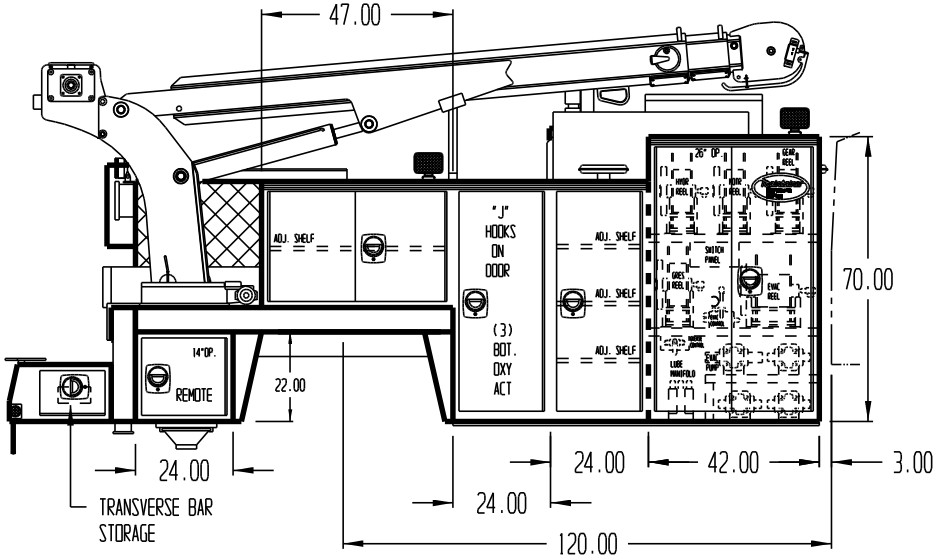

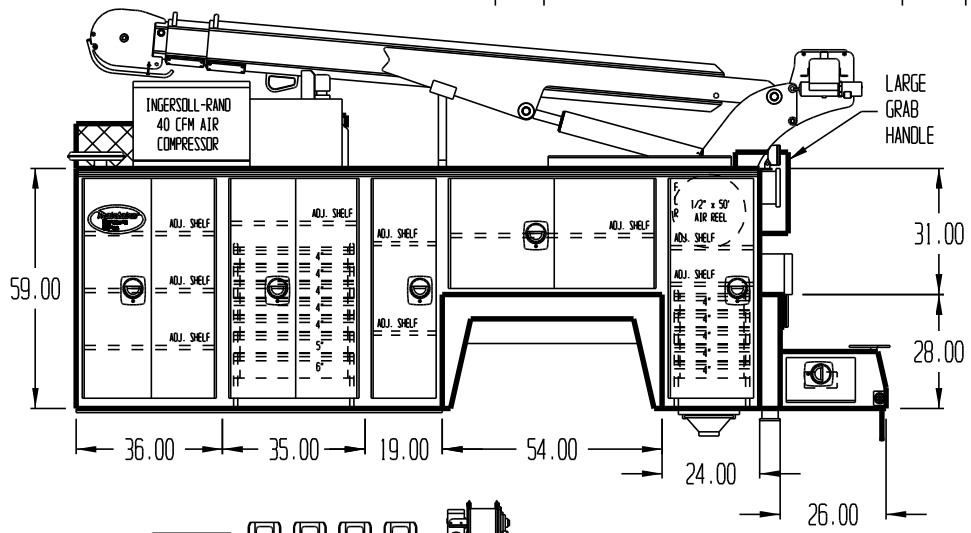

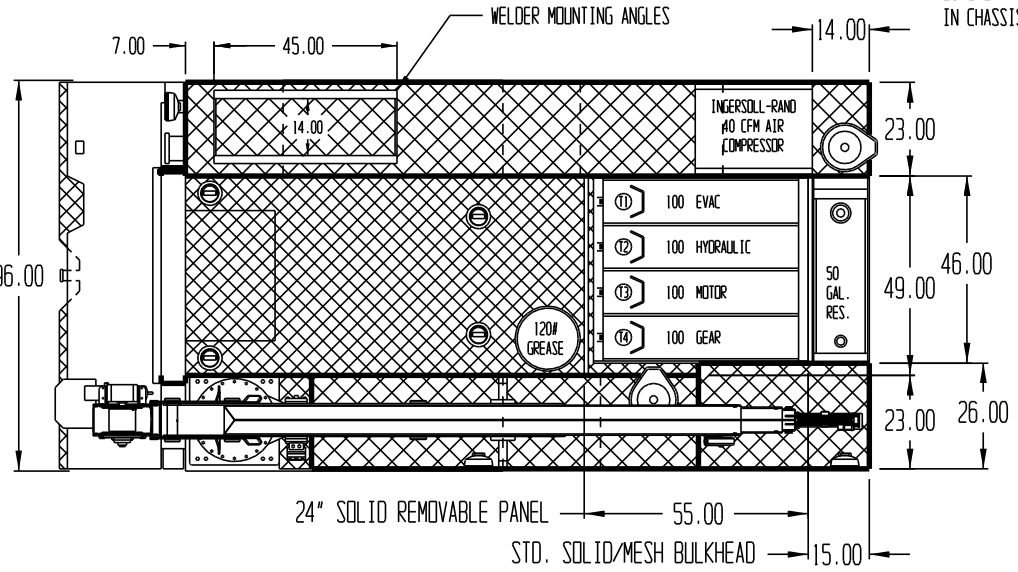

NOTE:
20 GAL. AIR TANK
IN CHASSIS FRAME

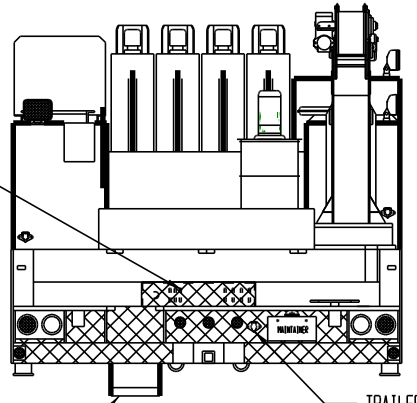

NOTE: INTERIOR STRIP LIGHTS
(5) 36" SS 1, 2, 3 & CS 1, 2
(6) 12" 2ea. SS 4, 5 & CS 4

NOTE: LINE-X CARGO CENTER DECK, COMPARTMENT TOPS, SIDES, (NOT BACKS), FRONT BULKHEAD, REMOVABLE PANEL, TAIL GATE &TAIL GATE EXTENSION, REAR WORK BENCH BUMPER AND STEP AND INSIDE REEL COMPARTMENT

HYDRAULIC EXTEND IN/OUT OUTRIGGER

TRAILER PLUG (7-PRONG FLAT BLADE)

NOTE: 8" SILLS &
4" X-MEMBERS

NOTE: USABLE CENTER DECK
CARGO WIDTH 48.50"

PLEASE REPORT ANY ERRORS FOUND ON THIS PRINT

THIS PRINT CONTAINS CONFIDENTIAL INFORMATION AND IS THE SOLE PROPERTY OF MAINTAINER CORP. OF IOWA INC. AND IS NOT TO BE COPIED OR REPRODUCED WITHOUT THE EXPRESSED WRITTEN PERMISSION OF MAINTAINER CORP. OF IOWA INC.

PROPRIETARY DATA PROPERTY OF MAINTAINER CORPORATION OF IOWA, INC.

COPYRIGHT © 2000

UOS DIMENSIONS ARE IN INCHES
GENERAL TOLERANCES

BREAK ALL EDGES .01 X 45°	ANGULAR ± 1° .XX ± .03 .XXX ± .005
UOS RADII	UOS ANGLES

MATERIAL:

SCALE: 1:32 SIZE: B

DRAWING NUMBER: Y097

DFTM. STZ DATE: 12/18/06

MADE IN THE USA

Maintainer
Corporation of Iowa, Inc.
P.O. Box 349 1701 S. 2nd Avenue
Sheldon, Iowa 51201

10000TT-2-120/L STOCK / SIGNATURE-5